PANZERI

Carl

500mA DC dimmable (DALI/Push DIM)
X12317.010.2502

brushed bronze

DIRECT LIGHT

Data sheet

CODE	X12317.010.2502
SYSTEM POWER CONSUMPTION	18W
EFFICACY	79.78lm/W
LIGHT SOURCE	LED
LIGHT SOURCE LIFETIME	L80 (B10) 50.000h
COLOUR TEMPERATURE	3000K Ra>90
LIGHT DISTRIBUTION	adjustable
BEAM ANGLE	30°
POWER SUPPLY	500mA DC
ELECTRICAL CONFIGURATION	dimmable (DALI/Push DIM)
DRIVER	remote included
NOMINAL LUMINOUS FLUX	2051lm
LUMEN OUTPUT	1436lm
EFFICIENCY	70%
GLARE RATING	UGR < 16
WEIGHT	0,29 Kg
PROTECTION DEGREE	IP20
GLOW WIRE TEST PERFORMANCE	850°
PACKING DIMENSIONS	13,0 x 15,0 x 9,0 cm



Lighting fixture for ceiling semi-built-in installation for interiors, with swivelling light beam.
Built-in ceiling plate for permanent false ceilings, in die-cast aluminium with polyacrylic paint.
Die-cast aluminium joint with polyacrylic paint.
Die-cast aluminium structure rotating on two axes in white, black, bronze, mat brass or titanium polyacrylic paint.
Reflector in thermoplastic material with chrome plated finish.
Textured glass screen.
Anti-glare snoot in black thermoplastic material.
Stainless steel spring clips for false ceiling fixing.
Equipped with 0,4m (15,7") long power cable.
Built-in hole dimension: Ø 55mm (Ø 2,2")

Technical drawing

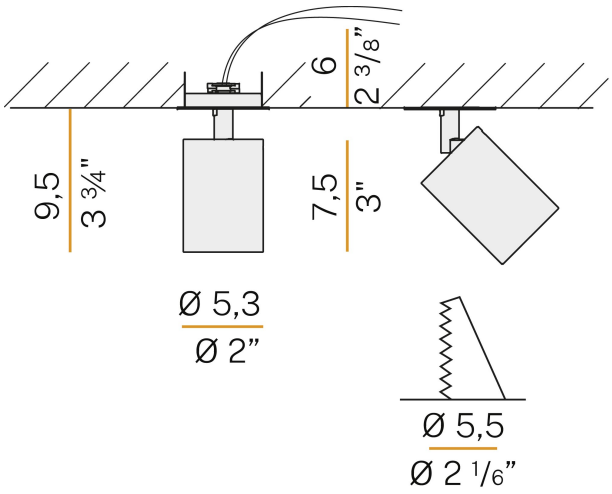

Polar diagram

