PANZERI

Carl

700mA DC ON-OFF
X12317.007.2501

brushed bronze

DIRECT LIGHT

Data sheet

CODE	X12317.007.2501
SYSTEM POWER CONSUMPTION	6,5W
EFFICACY	70.83lm/W
LIGHT SOURCE	LED
LIGHT SOURCE LIFETIME	L80 (B10) 50.000h
COLOUR TEMPERATURE	3000K Ra>90
LIGHT DISTRIBUTION	adjustable
BEAM ANGLE	34°
POWER SUPPLY	700mA DC
ELECTRICAL CONFIGURATION	ON-OFF
DRIVER	remote included
NOMINAL LUMINOUS FLUX	650lm
LUMEN OUTPUT	425lm
EFFICIENCY	65.4%
GLARE RATING	UGR < 12
WEIGHT	0,11 Kg
PROTECTION DEGREE	IP20
GLOW WIRE TEST PERFORMANCE	850°
PACKING DIMENSIONS	8,0 x 12,5 x 8,0 cm



Lighting fixture for ceiling semi-built-in installation for interiors, with swivelling light beam.
Built-in ceiling plate for permanent false ceilings, in die-cast aluminium with polyacrylic paint.
Die-cast aluminium joint with polyacrylic paint.
Die-cast aluminium structure rotating on two axes in white, black, bronze, mat brass or titanium polyacrylic paint.
Reflector in thermoplastic material with chrome plated finish.
Textured glass screen.
Anti-glare snoot in black thermoplastic material.
Stainless steel spring clips for false ceiling fixing.
Equipped with 0,4m (15,7") long power cable.
Built-in hole dimension: Ø 42mm (Ø 1,7")

Technical drawing

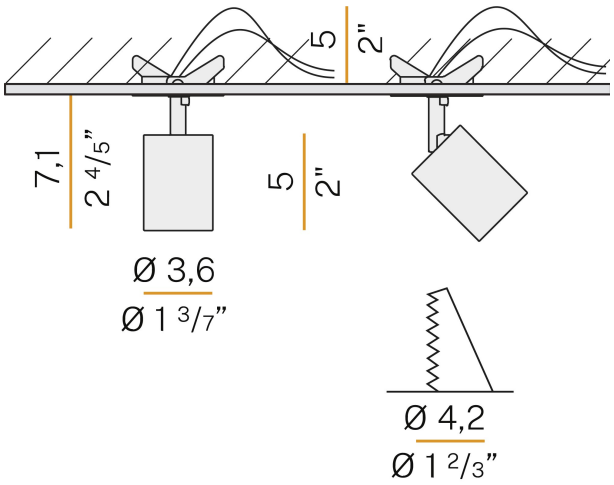

Polar diagram

