PANZERI

Lola

500mA DC dimmable (DALI/Push DIM)
X12001.020.3602

white

DIRECT LIGHT

Data sheet

CODE	X12001.020.3602
SYSTEM POWER CONSUMPTION	18W
EFFICACY	110.83lm/W
LIGHT SOURCE	LED
LIGHT SOURCE LIFETIME	L80 (B10) 50.000h
COLOUR TEMPERATURE	2700K Ra>85
LIGHT DISTRIBUTION	adjustable
BEAM ANGLE	24°
POWER SUPPLY	500mA DC
ELECTRICAL CONFIGURATION	dimmable (DALI/Push DIM)
DRIVER	remote included
NOMINAL LUMINOUS FLUX	2400lm
LUMEN OUTPUT	1995lm
EFFICIENCY	83.1%
GLARE RATING	UGR < 12
WEIGHT	0,52 Kg
PROTECTION DEGREE	IP20
GLOW WIRE TEST PERFORMANCE	850°
PACKING DIMENSIONS	12,0 x 29,5 x 11,0 cm

Lighting fixture for ceiling semi-built-in installation for interiors, with swivelling light beam.
Built-in ceiling plate for permanent false ceilings, in pickled sheet metal with polyacrylic paint.
Turned brass joint.
Die-cast aluminium structure rotating on two axes in white, black, bronze, mat brass or titanium polyacrylic paint.
Reflector in thermoplastic material with chrome plated finish.
Anti-glare snoot in black thermoplastic material.
Stainless steel spring clips for false ceiling fixing.
Equipped with 0,4m (15,7") long power cable.
Built-in hole dimension: Ø 65mm (Ø 2,6")

Technical drawing

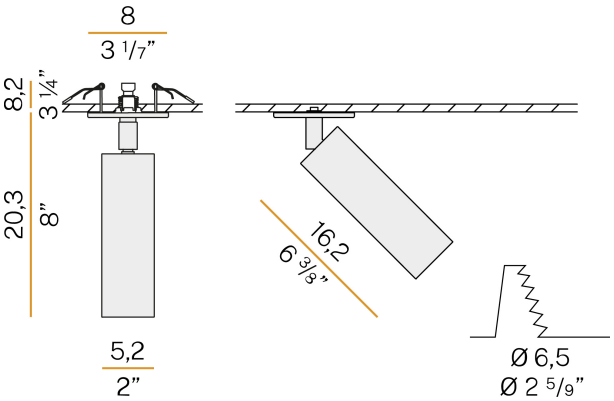
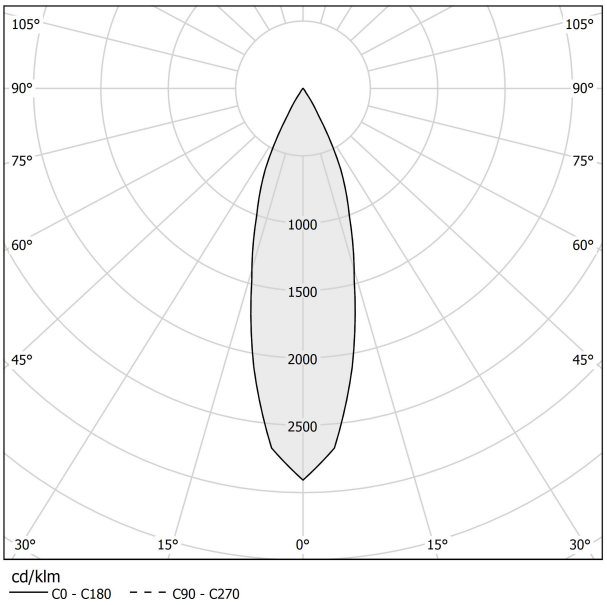
Polar diagram