PANZERI

Planet Ring

220-240V AC ON-OFF
X08301.070.0401

white

DIRECT LIGHT

Data sheet

CODE	X08301.070.0401
SYSTEM POWER CONSUMPTION	71W
EFFICACY	82.59lm/W
LIGHT SOURCE	LED
LIGHT SOURCE LIFETIME	L80 (B20) 80.000h
COLOUR TEMPERATURE	3000K Ra>90
LIGHT DISTRIBUTION	diffused
POWER SUPPLY	220-240V AC
FREQUENCY	50/60Hz
ELECTRICAL CONFIGURATION	ON-OFF
DRIVER	integrated included
NOMINAL LUMINOUS FLUX	8857lm
LUMEN OUTPUT	5864lm
EFFICIENCY	66.2%
WEIGHT	8,83 Kg
PROTECTION DEGREE	IP40 IP20
COLOUR TOLLERANCES	SDCM 3
GLOW WIRE TEST PERFORMANCE	850°
PACKING DIMENSIONS	68,0 x 68,0 x 18,0 cm

Lighting fixture for ceiling built-in installation for interiors, with direct light emission.
Built-in structure for permanent false ceilings, in pickled sheet metal in white polyacrylic paint.
Aluminium dissipation plate.
Pickled sheet metal closing frame in polyacrylic paint.
Modelled polycarbonate diffuser with opaline finish.
Galvanized sheet metal brackets for false ceiling fixing.
Built-in hole dimension: Ø 655mm (Ø 25,8")

Technical drawing

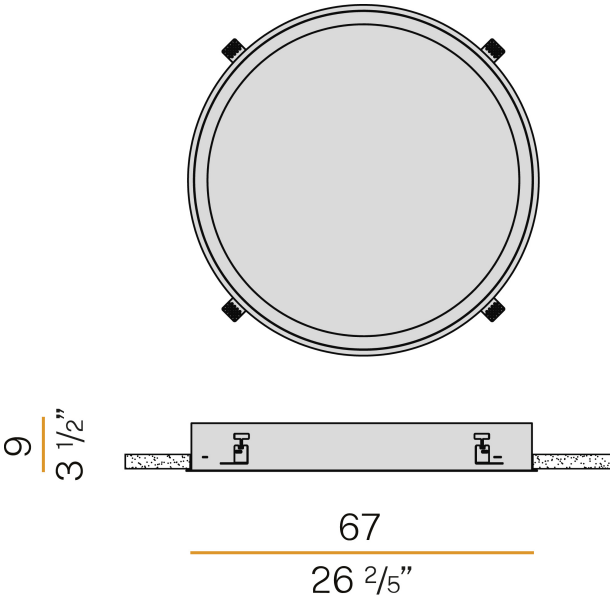
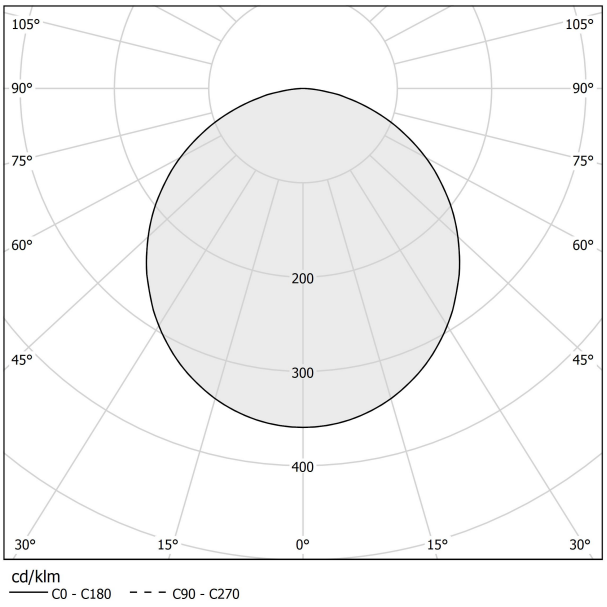
Polar diagram