PANZERI

Jackie

220-240V AC ON-OFF
P07702.000.0101

black

DIRECT LIGHT

Data sheet

CODE	P07702.000.0101
SYSTEM POWER CONSUMPTION	8,5W
EFFICACY	102.5lm/W
LIGHT SOURCE	LED
LIGHT SOURCE LIFETIME	L90 (B10) 50.000h
COLOUR TEMPERATURE	3000K Ra>80
LIGHT DISTRIBUTION	adjustable
BEAM ANGLE	90°
POWER SUPPLY	220-240V AC
FREQUENCY	50/60Hz
ELECTRICAL CONFIGURATION	ON-OFF
DRIVER	integrated included
NOMINAL LUMINOUS FLUX	1027lm
LUMEN OUTPUT	820lm
EFFICIENCY	79.8%
WEIGHT	0,46 Kg
PROTECTION DEGREE	IP40
COLOUR TOLLERANCES	SDCM 3
PACKING DIMENSIONS	12,0 x 24,0 x 13,0 cm



Ceiling or wall lighting fixture for interiors, with swivelling light beam.
Pickled sheet metal ceiling/wall bracket in polyacrylic paint.
Die-cast aluminium wall plate in polyacrylic paint.
Die-cast aluminium structure in white, black, red or titanium polyacrylic paint.
Die-cast aluminium head rotating on two axes in polyacrylic paint.
Modelled acrylic diffuser with mat finish and double serigraphy.

Technical drawing

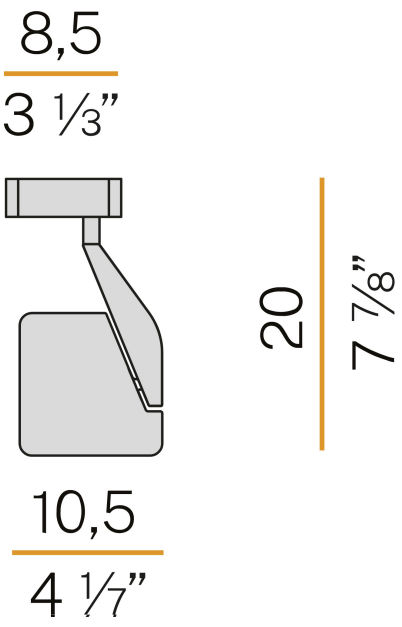

Application



Polar diagram

