PANZERI

Gilbert

220-240V AC dimmable (DALI/Push DIM)
P06501.045.0402

white

DIRECT + INDIRECT LIGHT

Data sheet

CODE	P06501.045.0402
SYSTEM POWER CONSUMPTION	20W
EFFICACY	92lm/W
LIGHT SOURCE	LED
LIGHT SOURCE LIFETIME	L90 (B10) 50.000h
COLOUR TEMPERATURE	3000K Ra>90
LIGHT DISTRIBUTION	diffused
POWER SUPPLY	220-240V AC
FREQUENCY	50/60Hz
ELECTRICAL CONFIGURATION	dimmable (DALI/Push DIM)
DRIVER	integrated included
NOMINAL LUMINOUS FLUX	2301lm
LUMEN OUTPUT	1840lm
EFFICIENCY	80%
WEIGHT	5,12 Kg
PROTECTION DEGREE	IP20
COLOUR TOLLERANCES	SDCM 3
PACKING DIMENSIONS	0,0 x 0,0 x 0,0 cm

Ceiling lighting fixture for interiors, with direct and indirect light emission.
Galvanized sheet metal ceiling bracket.
Turned pickled sheet metal structure in white polyacrylic paint.
Wall plate with lever-closing mechanism in pressed pickled sheet metal in white powder paint.
Extruded aluminium heat sink.
Diffuser in mat white blown glass.

Technical drawing

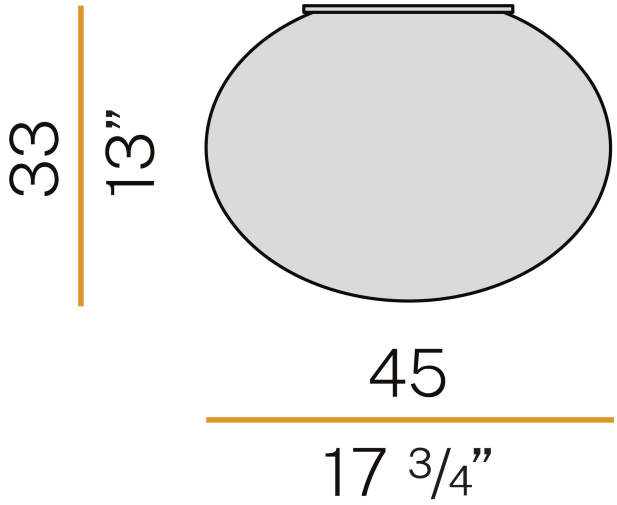

Polar diagram

