PANZERI

Hilow

24V DC 24V
P02919.115.0410

matte brass

DIRECT + INDIRECT LIGHT

Data sheet

CODE	P02919.115.0410
SYSTEM POWER CONSUMPTION	72W
EFFICACY	36.82lm/W
LIGHT SOURCE	LED
LIGHT SOURCE LIFETIME	L70 (B10) 60.000h
COLOUR TEMPERATURE	3000K Ra>90
LIGHT DISTRIBUTION	diffused
POWER SUPPLY	24V DC
ELECTRICAL CONFIGURATION	24V
DRIVER	remote not included
NOMINAL LUMINOUS FLUX	8820lm
LUMEN OUTPUT	2651lm
EFFICIENCY	30.1%
WEIGHT	2,15 Kg
PROTECTION DEGREE	IP20
COLOUR TOLLERANCES	SDCM 3
PACKING DIMENSIONS	87,0 x 118,0 x 14,0 cm

Ceiling lighting fixture for interiors, with direct and indirect light emission.
Pickled sheet metal ceiling bracket in polyacrylic paint.
Pickled sheet metal wall plate in polyacrylic paint.
Extruded aluminium structure in white, mat black, bronze, mat brass or titanium polyacrylic paint.
Joints in turned brass and die-cast aluminium in polyacrylic paint.
Die-cast aluminium end caps in polyacrylic paint.
Extruded polycarbonate diffusers with black finish for direct light emission and opaline finish for indirect light emission.

Technical drawing

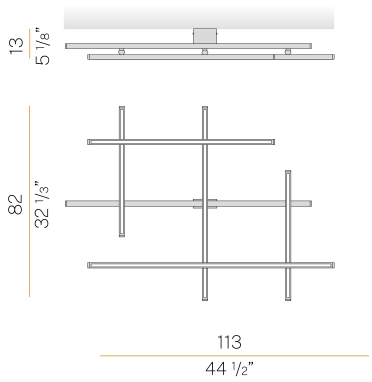
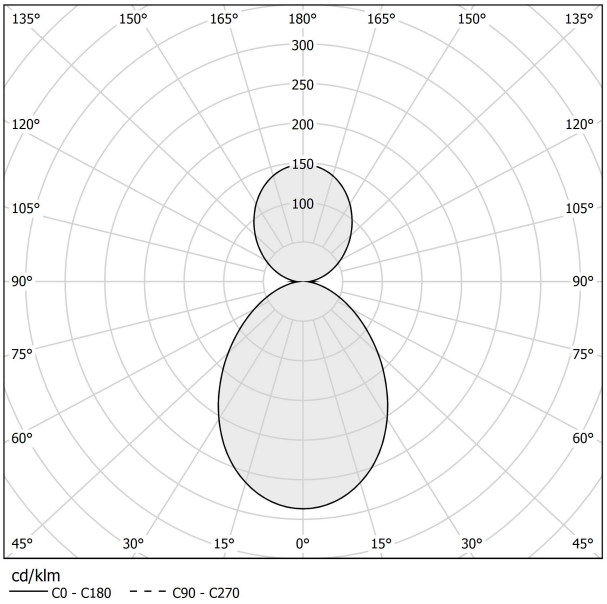
Polar diagram