PANZERI

Hilow

220-240V AC dimmable (DALI/Push DIM)
P02905.115.0402

champagne

DIRECT + INDIRECT LIGHT

Data sheet

CODE	P02905.115.0402
SYSTEM POWER CONSUMPTION	78W
EFFICACY	30.21lm/W
LIGHT SOURCE	LED
LIGHT SOURCE LIFETIME	L70 (B10) 60.000h
COLOUR TEMPERATURE	3000K Ra>90
LIGHT DISTRIBUTION	diffused
POWER SUPPLY	220-240V AC
FREQUENCY	50/60Hz
ELECTRICAL CONFIGURATION	dimmable (DALI/Push DIM)
DRIVER	integrated included
NOMINAL LUMINOUS FLUX	8316lm
LUMEN OUTPUT	2356lm
EFFICIENCY	28.3%
WEIGHT	2,97 Kg
PROTECTION DEGREE	IP20
COLOUR TOLLERANCES	SDCM 3
PACKING DIMENSIONS	87,0 x 118,0 x 14,0 cm

Ceiling lighting fixture for interiors, with direct and indirect light emission.
Pickled sheet metal ceiling bracket in polyacrylic paint.
Pickled sheet metal wall plate in polyacrylic paint.
Extruded aluminium structure in white, mat black, bronze, mat brass or titanium polyacrylic paint.
Joints in turned brass and die-cast aluminium in polyacrylic paint.
Die-cast aluminium end caps in polyacrylic paint.
Extruded polycarbonate diffusers with black finish for direct light emission and opaline finish for indirect light emission.

Technical drawing

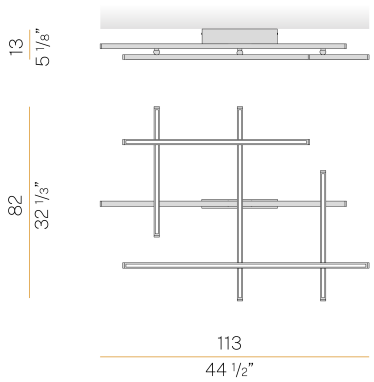
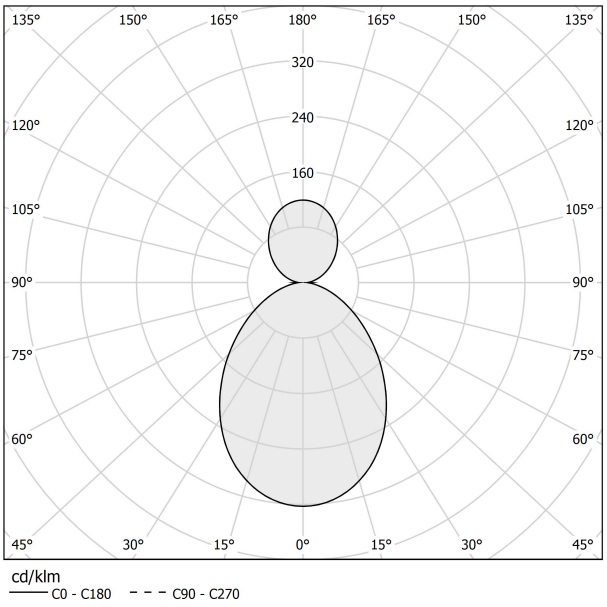
Polar diagram