PANZERI

Hilow

220-240V AC dimmable (DALI/Push DIM)
P02806.115.0402

matte black

DIRECT + INDIRECT LIGHT

Data sheet

CODE	P02806.115.0402
SYSTEM POWER CONSUMPTION	78W
EFFICACY	59lm/W
LIGHT SOURCE	LED
LIGHT SOURCE LIFETIME	L70 (B10) 60.000h
COLOUR TEMPERATURE	3000K Ra>90
LIGHT DISTRIBUTION	diffused
POWER SUPPLY	220-240V AC
FREQUENCY	50/60Hz
ELECTRICAL CONFIGURATION	dimmable (DALI/Push DIM)
DRIVER	integrated included
NOMINAL LUMINOUS FLUX	8316lm
LUMEN OUTPUT	4602lm
EFFICIENCY	55.3%
WEIGHT	2,97 Kg
PROTECTION DEGREE	IP20
COLOUR TOLLERANCES	SDCM 3
PACKING DIMENSIONS	87,0 x 118,0 x 14,0 cm

Ceiling lighting fixture for interiors, with direct and indirect light emission.
Pickled sheet metal ceiling bracket in polyacrylic paint.
Pickled sheet metal wall plate in polyacrylic paint.
Extruded aluminium structure in white, mat black, bronze, mat brass or titanium polyacrylic paint.
Joints in turned brass and die-cast aluminium in polyacrylic paint.
Die-cast aluminium end caps in polyacrylic paint.
Extruded polycarbonate diffusers with opaline finish.

Technical drawing

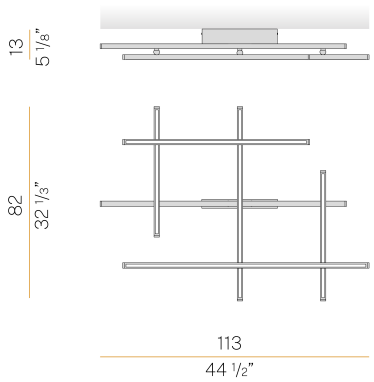
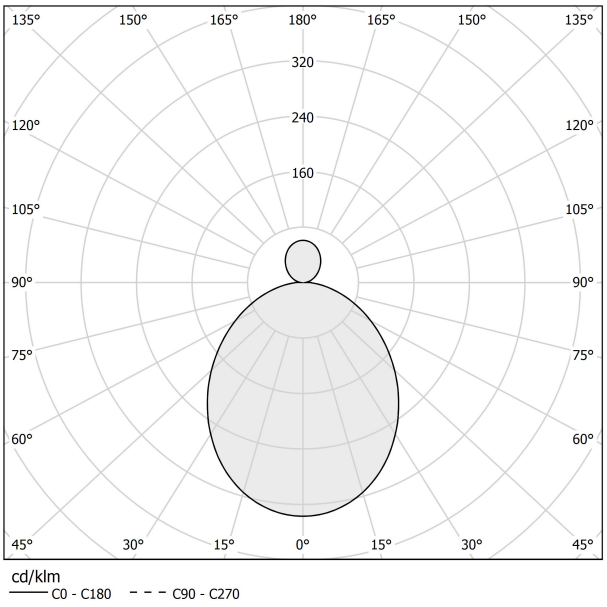
Polar diagram