PANZERI

Evy

220-240V AC
L10272.000.0000

mat brass/crystal diffuser

DIRECT + INDIRECT LIGHT

Data sheet

CODE	L10272.000.0000
SYSTEM POWER CONSUMPTION	max 48W
LIGHT SOURCE	LED retrofit / halogen
LIGHT SOURCE KIT	not included
COMPATIBLE SOURCES	LED retrofit bulb G9 (L max 60mm - Ø max 17,5mm) / max 48W G9
LIGHT DISTRIBUTION	diffused
POWER SUPPLY	220-240V AC
FREQUENCY	50/60Hz
WEIGHT	0,82 Kg
PROTECTION DEGREE	IP40
PACKING DIMENSIONS	0,0 x 0,0 x 0,0 cm

Suspension lighting fixture for interiors, with direct and indirect light emission.
Pickled sheet metal structure in white polyacrylic paint.
Diffuser in blown glass with crystal, steel, amber, bronze, tobacco or green ballotondo finish.
Turned pickled sheet metal closing disk in mat brass polyacrylic paint.
3m (118,1") long suspension and power cable in transparent PVC.
Power canopy with galvanized sheet metal ceiling bracket and pickled sheet metal covering in mat brass polyacrylic paint.
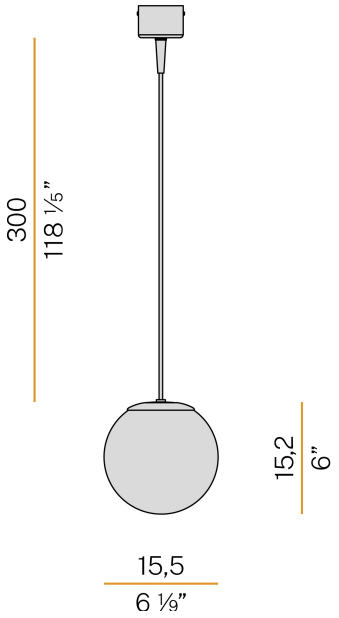
Technical drawing