PANZERI

Ginevra

220-240V AC dimmable (DALI/Push DIM)
L09280.080.0402

matte black - brass

DIRECT + INDIRECT LIGHT

Data sheet

CODE	L09280.080.0402
SYSTEM POWER CONSUMPTION	82W
EFFICACY	94.9lm/W
LIGHT SOURCE	LED
LIGHT SOURCE LIFETIME	L80 (B20) 80.000h
COLOUR TEMPERATURE	3000K Ra>90
LIGHT DISTRIBUTION	diffused
POWER SUPPLY	220-240V AC
FREQUENCY	50/60Hz
ELECTRICAL CONFIGURATION	dimmable (DALI/Push DIM)
DRIVER	integrated included
NOMINAL LUMINOUS FLUX	10285lm
LUMEN OUTPUT	7782lm
EFFICIENCY	75.7%
GLARE RATING	UGR < 19
WEIGHT	10,97 Kg
PROTECTION DEGREE	IP20
COLOUR TOLLERANCES	SDCM <3
PACKING DIMENSIONS	18,0 x 90,0 x 90,0 cm



Suspension lighting fixture for interiors, with direct and indirect light emission.
Pickled sheet metal cap in polyacrylic paint.
Turned aluminium structure in mat black and gold or white and gold polyacrylic paint.
Pickled sheet metal wiring support plate in polyacrylic paint.
Moulded polycarbonate micro-prismatic diffuser.
2m (78,7") long steel suspension cables.
2,2m (86,6") long power cable in transparent PVC.
Power canopy with galvanized sheet metal ceiling bracket and pickled sheet metal covering in white or mat black polyacrylic paint.

Technical drawing

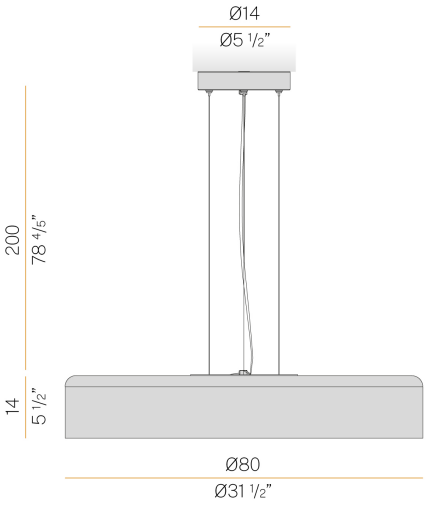

Polar diagram

