PANZERI

Côte

220-240V AC dimmable (phase cut)
L06102.050.0504

black

DIRECT LIGHT

Data sheet

CODE	L06102.050.0504
SYSTEM POWER CONSUMPTION	22,5W
EFFICACY	82.5lm/W
LIGHT SOURCE	LED
COLOUR TEMPERATURE	2700K Ra>90
LIGHT DISTRIBUTION	diffused
POWER SUPPLY	220-240V AC
FREQUENCY	50/60Hz
ELECTRICAL CONFIGURATION	dimmable (phase cut)
DRIVER	integrated included
NOMINAL LUMINOUS FLUX	2621lm
LUMEN OUTPUT	1815lm
EFFICIENCY	69.2%
WEIGHT	4,70 Kg
PROTECTION DEGREE	IP20
COLOUR TOLLERANCES	SDCM <3
PACKING DIMENSIONS	0,0 x 0,0 x 0,0 cm

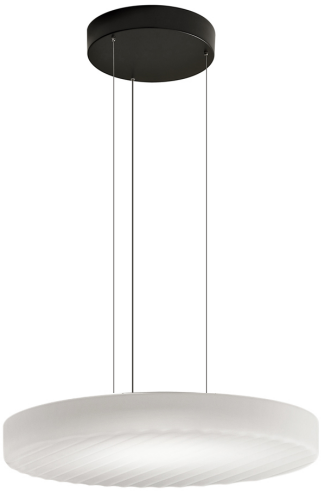

Suspension lighting fixture for interiors, with direct light emission.
Die-cast aluminium structure in black or white polyacrylic paint.
Diffuser screen made of frosted blown glass with matt white or smoke grey finish.
2m (78,7") long steel suspension cables.
2,2m (86,6") long power cable in transparent PVC.
Power canopy with metal ceiling bracket and pickled sheet metal covering in white or black polyacrylic paint.
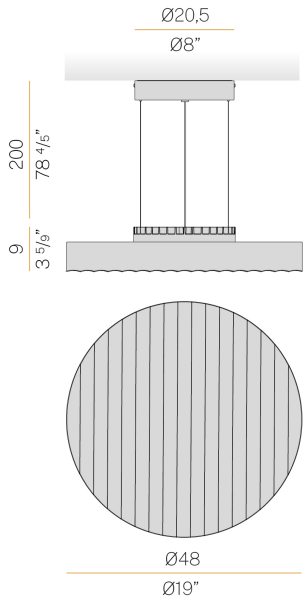
Technical drawing