PANZERI

Phi

220-240V AC ON-OFF
L05801.060.0501

white

DIRECT LIGHT

Data sheet

CODE	L05801.060.0501
SYSTEM POWER CONSUMPTION	8,5W
EFFICACY	67.25lm/W
LIGHT SOURCE	LED
LIGHT SOURCE LIFETIME	L80 (B10) 70.000h
COLOUR TEMPERATURE	2700K Ra>90
LIGHT DISTRIBUTION	diffused
POWER SUPPLY	220-240V AC
FREQUENCY	50/60Hz
ELECTRICAL CONFIGURATION	ON-OFF
DRIVER	integrated included
NOMINAL LUMINOUS FLUX	637lm
LUMEN OUTPUT	538lm
EFFICIENCY	84.5%
WEIGHT	1,20 Kg
PROTECTION DEGREE	IP40
COLOUR TOLLERANCES	SDCM 3
PACKING DIMENSIONS	58,0 x 58,0 x 14,0 cm



Sound-absorbing suspension lamp for direct lighting, with integrated driver.
Sound-absorbing lampshade by Slalom composed of 75% recycled plastic material covered with 96% recycled felt.
LED light source available in 2700K, in white, black and mat brass finishes with 'milk' lampshade and in bronze and titanium finishes with 'mud' lampshade.

Technical drawing

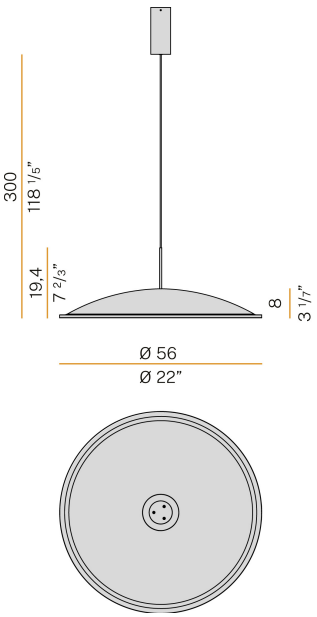

Polar diagram

