PANZERI

Venexia

220-240V AC ON-OFF
ET04816.045.0201

corten

DIRECT LIGHT

Data sheet

CODE	ET04816.045.0201
SYSTEM POWER CONSUMPTION	8W
EFFICACY	74.25lm/W
LIGHT SOURCE	LED
LIGHT SOURCE LIFETIME	L80 (B20) 80.000h
COLOUR TEMPERATURE	2700K Ra>80
LIGHT DISTRIBUTION	diffused
POWER SUPPLY	220-240V AC
FREQUENCY	50/60Hz
ELECTRICAL CONFIGURATION	ON-OFF
DRIVER	integrated included
NOMINAL LUMINOUS FLUX	930lm
LUMEN OUTPUT	594lm
EFFICIENCY	63.9%
WEIGHT	3,43 Kg
PROTECTION DEGREE	IP65
COLOUR TOLLERANCES	SDCM 3
SHOCK RESISTANCE RATING	IK06
PACKING DIMENSIONS	27,0 x 27,0 x 56,0 cm



Floor lighting fixture for outdoor spaces, with direct light emission.
Galvanized sheet metal bracket for floor installation.
Turned aluminium base in corten, micaceous grey or mat brass polyacrylic paint.
Body in aluminium tube in corten or micaceous grey polyacrylic paint, or with wood finish coating.
Turned aluminium structure in corten, micaceous grey or mat brass polyacrylic paint.
Transparent silicone gaskets.
Screen in partially mat cast glass.
Turned aluminium closing disk in corten, micaceous grey or mat brass polyacrylic paint.
Nickelled brass M12 cable gland.
Stainless steel screws.
Equipped with neoprene power cable.

Technical drawing

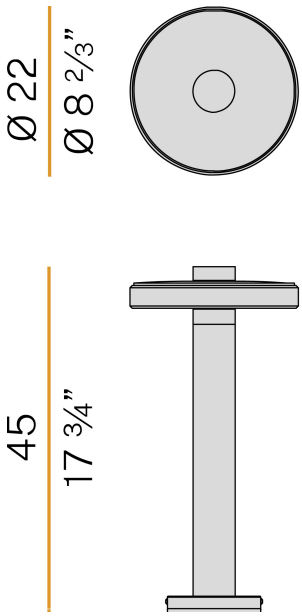

Polar diagram

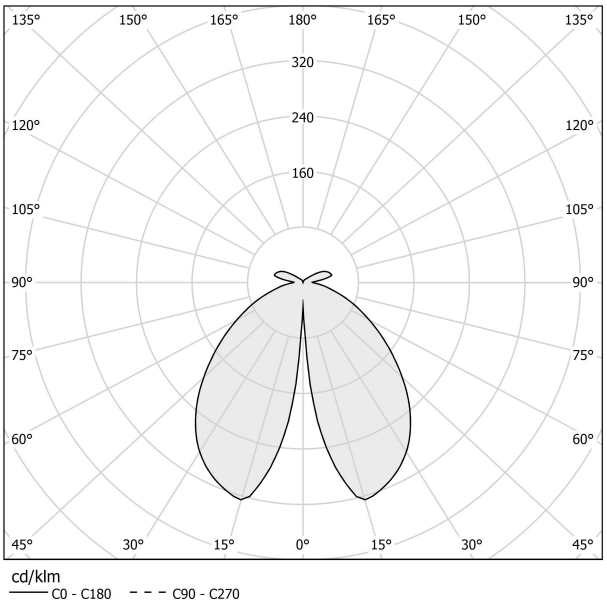

PANZERI

Venexia

Accessories / fixing

YTF04800.012

Anchor bolts for ground fixing.

