PANZERI

Astoria Line

48V DC dimmable (DALI)
B43102.060.0519

black

DIRECT LIGHT

Data sheet

CODE	B43102.060.0519
SYSTEM POWER CONSUMPTION	11,4W
EFFICACY	90lm/W
LIGHT SOURCE	LED
COLOUR TEMPERATURE	2700K Ra>90
LIGHT DISTRIBUTION	diffused
POWER SUPPLY	48V DC
ELECTRICAL CONFIGURATION	dimmable (DALI)
LUMEN OUTPUT	990lm
WEIGHT	0,33 Kg
PROTECTION DEGREE	IP20
PACKING DIMENSIONS	0,0 x 0,0 x 0,0 cm



Linear diffused LED module for 48V low voltage electrified track, for ceiling/wall, suspensed or recessed applications, with black aluminium body and opal polycarbonate screen.
Available in 2700K and 3000K.
Possibility of dimming with DALI protocol.

Technical drawing

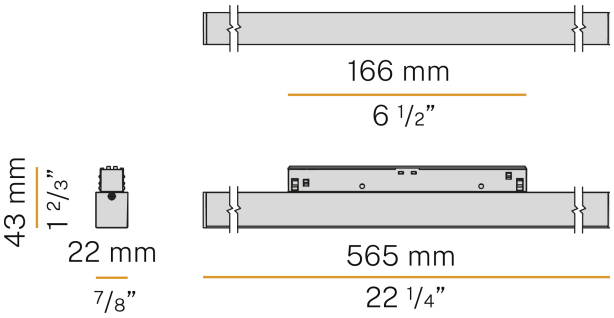

Application



Polar diagram

