PANZERI

Dip

220-240V AC dimmable (DALI/Push DIM)
A08406.070.0502

mat black

DIRECT LIGHT

Data sheet

CODE	A08406.070.0502
SYSTEM POWER CONSUMPTION	18W
EFFICACY	107.28lm/W
LIGHT SOURCE	LED
COLOUR TEMPERATURE	2700K Ra>90
LIGHT DISTRIBUTION	diffused
POWER SUPPLY	220-240V AC
FREQUENCY	50/60Hz
ELECTRICAL CONFIGURATION	dimmable (DALI/Push DIM)
DRIVER	integrated included
NOMINAL LUMINOUS FLUX	3013lm
LUMEN OUTPUT	1931lm
EFFICIENCY	64.1%
WEIGHT	2,64 Kg
PROTECTION DEGREE	IP40
COLOUR TOLLERANCES	SDCM 3
PACKING DIMENSIONS	49,0 x 119,0 x 19,0 cm

Wall installation lighting fixture for interiors, with direct or indirect light emission.
Power supply canopy with pickled sheet metal fixing bracket, deep-drawn sheet metal closing frame in polyacrylic paint.
Calendered steel tube stem, with polyacrylic paint.
Die-cast aluminum emitting head with polyacrylic paint in champagne, mat black, bronze and soft textured white finishes.
UV technology screen-printed diffuser, made of opal polycarbonate, installed with magnetic coupling.

Technical drawing

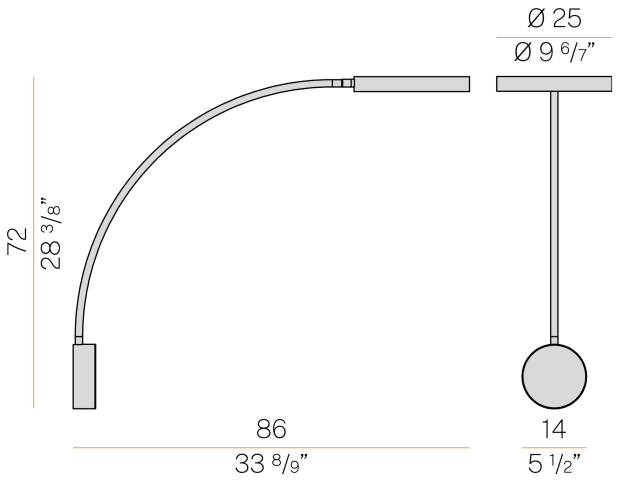

Polar diagram

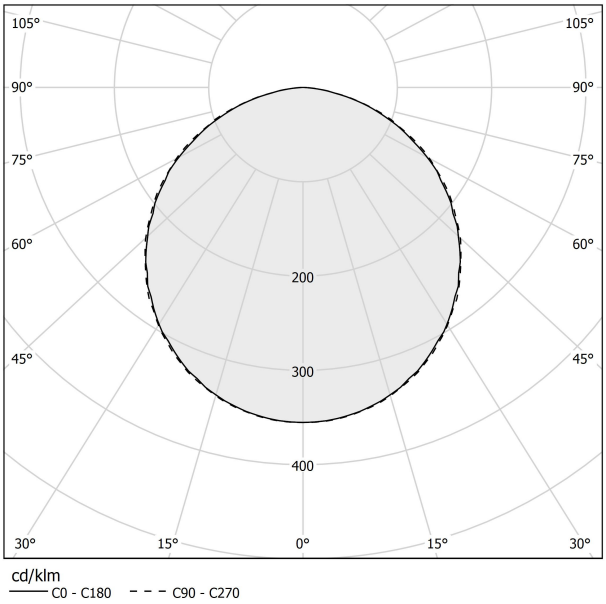

PANZERI

Dip

Accessories / diffusion

YKG08406.01

Anti-glare grid kit for Dip (indoor)