PANZERI

Tubino

220-240V AC ON-OFF
A07317.001.0501

bronze

DIRECT LIGHT

Data sheet

CODE	A07317.001.0501
SYSTEM POWER CONSUMPTION	6,5W
EFFICACY	56.5lm/W
LIGHT SOURCE	LED
LIGHT SOURCE LIFETIME	L70 (B50) 80.000h
COLOUR TEMPERATURE	2700K Ra>90
LIGHT DISTRIBUTION	adjustable
POWER SUPPLY	220-240V AC
FREQUENCY	50/60Hz
ELECTRICAL CONFIGURATION	ON-OFF
DRIVER	integrated included
NOMINAL LUMINOUS FLUX	475lm
LUMEN OUTPUT	339lm
EFFICIENCY	71.4%
WEIGHT	0,62 Kg
PROTECTION DEGREE	IP20
COLOUR TOLLERANCES	SDCM 3
PACKING DIMENSIONS	29,0 x 24,0 x 14,0 cm

Ceiling or wall lighting fixture for interiors, with swivelling light beam.
Galvanized sheet metal ceiling or wall bracket.
Die-cast aluminium wall plate in white, champagne, mat black, bronze or titanium polyacrylic paint.
Turned brass joints in polyacrylic paint.
Turned aluminium structure in polyacrylic paint.
Turned aluminium head rotating on two axes in polyacrylic paint.
Modelled polycarbonate diffuser with opaline finish.
Turned brass end cap in polyacrylic paint.

Technical drawing

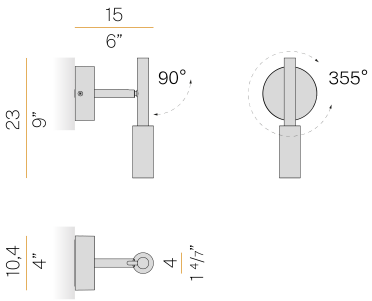

Application
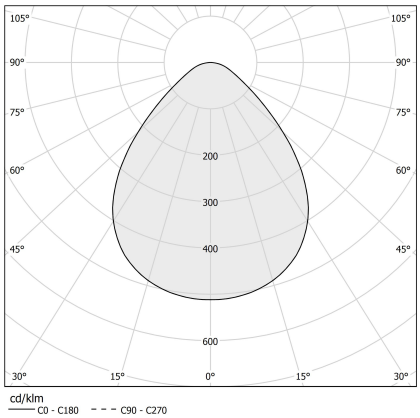
Polar diagram